English

AcciaieriaArvedi

Arvedi

Finarvedi is the holding company of the Arvedi Group, the core business of which is composed of steelmaking activities with annual volumes of over about 4 million tonnes of products characterised by high quality and destined for the most demanding markets.

The Arvedi Group, founded in 1963 by Giovanni Arvedi, can count about 2500 employees and a consolidated turnover of over €2 billion.

Four manufacturing companies, situated in northern Italy and operating in three specific sectors, make up the Arvedi Group's steelmaking nucleus:

• Acciaieria Arvedi S.p.A. (Cremona), Europe's first example of a mini-mill for hot rolled carbon flat steel products;

• Arvedi Tubi Acciaio S.p.A. (Cremona) and Ilta Inox S.p.A. (Robecco d'Oglio-Cremona), operating respectively in the welded and cold drawn carbon steel and welded stainless steel tube sectors;

• Arinox S.p.A. (Sestri Levante-Genova), manufacturer of re-rolled stainless steel precision strip.

The companies of the Arvedi Group, thanks to their production, organization and logistics structures, have assumed leading roles not only in the panorama of Italian industry but also internationally.

In fact, a considerable share of their production (on average about 45%, with peaks of up to 85%) is destined for foreign markets.

Finarvedi SpA

Carbon steel

Acciaieria Arvedi SpA

Hot rolled pickled, galvanized and pre-painted carbon steel coils

Arvedi Tubi Acciaio SpA

Welded tubes in black carbon steel, galvanized and coated

Metalfer SpA
Roè Volciano (BS)

Arvedi Metalfer Brasil Ltda

Cold drawn carbon steel tubes

Stainless steel

ilta inox SpA

Welded tubes in stainless steel

Arinox SpA

Cold rolled stainless steel precision strip

chibro
Unità Produttiva Chibro

Press-fitting, Push-fitting systems in stainless steel and CUNI

Acciaieria Arvedi SpA

26100 Cremona / Italia
Via Acquaviva, 18
Tel. + 39 0372 478.1
Fax + 39 0372 478.259

sales@ast.arvedi.it

Arvedi Tubi Acciaio SpA

26100 Cremona / Italia
Via Acquaviva, 3
Tel. + 39 0372 409.1
Fax + 39 0372 41.31.70

sales@ata.arvedi.it

ilta inox SpA

26010 Robecco d'Oglio
Cremona / Italia
Strada Statale 45 bis
Tel. + 39 0372 9801
Fax + 39 0372 980.262

sales@ilta.arvedi.it

Arinox SpA

16039 Sestri Levante (GE) / Italia
Via Gramsci, 41/a
Tel. + 39 0185 3661
Fax + 39 185 366.320

sales@arinox.arvedi.it

www.arvedi.it

Arvedi

Aerial view of the steelworks and the new finishing plants

AcciaieriaArvedi

technological steel

It is a very modern industrial works, which, thanks to its technological, environmental and ergonomic conception: since 2010, when production on the new ESP line started, it can be defined as a new system for steel manufacturing.

The steel works has been in operation since 1992 and is Europe's first and the world's second mini-mill for the manufacture of flat rolled steel.
The compactness and speed of the production cycle allow extraordinary flexibility and a high level of service.

The manufacturing process, based on the innovative Arvedi ISP and ESP Technologies, allows liquid steel from the melt shop to be transformed into ultrathin gauge hot rolled coils of the best quality and at competitive costs in a single, extremely compact cycle.

Acciaieria Arvedi in Cremona produces over 3 million tonnes per year of coils and has 1420 employees.
The production mix is directed towards both thin and ultrathin gauges (down to 0.8 mm) and quality steels. Arvedi ultrathin steel has precision and surface characteristics enabling it to compete with and replace cold rolled material. Its quality steels range from steels for cold forming and constructions, re-rolling, high strength micro-alloyed and boron steels, heat treatment (case-hardening and tempering) steels and the new generation of multi-phase steels, a key product for cars. Tests have also been conducted with positive results on the 300 and 400 stainless steel series and on magnetic steels, production of which is expected soon.

The coil is further finished on pickling, hot-dip galvanising and pre-painting plants which together process a considerable share of production in order to serve end customers directly.

Production range: Gauges from 0.8 to 12 mm
Widths 1000 to 1570 mm

Arvedi ISP ESP

European patents nos 0415987 and 1868748 and others

Arvedi ISP/ESP technology the most advanced of the modern compact technologies

The process technology, now called as a whole "Arvedi ISP/ESP", is based on the casting of a thin steel strand rolled in-line and continuously into the coiled product; developed at the end of the 1980s on the ideas of the Chairman, Giovanni Arvedi, it is covered by 460 patents covering the most important industrialised countries regarding both the technology as a whole and the single plant component parts.
The idea, which became reality in 1992 in the Cremona works, was to produce large quantities of hot rolled thin gauge products through a process line which transforms the steel produced in an EAF or converter in a continuous and single, extremely compact cycle into quality steel coils that conventional plants and other thin slab technologies were unable to produce or produced at non-competitive costs.
With the ISP (In-line Strip Production) line the transformation of the liquid steel into quality coils through casting and continuous in-line rolling is achieved directly in the first rolling phase in only 180 metres and about 15 minutes, exploiting the energy contained in the liquid steel and its high plasticity at high temperatures.
The pre-rolled strip is heated in the Induction Heater, accumulated in the Cremona Box and subsequently rolled to the final thickness.
Thanks to this innovation, conceived and realised for the first time in the world within the Arvedi Group, the product has excellent qualities, energy consumption is very low and large quantities of ultrathin hot rolled steel in all steel grades can be produced.
Fifteen years after stable start-up of the initial technology, after intense phases of study and applied research conducted within Acciaieria Arvedi, a new technology was developed called ESP (Endless Strip Production) which represents important and definitive technological progress.
This great leap forward in development has been made concrete with the start-up in 2009 of the new ESP line which, through a totally in-line and continuous process, enhances and takes to completion the strong points already highlighted by the earlier technology from which it derives, the first of which is the high temperature endless rolling which exploits the energy content of the liquid steel in an even more complete way.
In brief, over a length similar to ISP (only 180 metres) and in 4 minutes the new ESP process transforms the liquid steel into coils with gauges down to 0.8 mm through a rolling line composed of 3 roughing stands and 5 finishing stands.
Installed power is much lower than conventional plants since rolling is carried out at high temperatures, and stresses and energy consumption are consequently lower. Compared with the ISP line productivity is more than doubled, thanks to the higher casting speed the Cremona Box is no longer present (in this way the process is fully continuous), and the induction heater is dimensioned with reduced criteria and power.
The ESP technology, because it is completely continuous, reduces energy consumption to the minimum technically achievable, has higher performances (more homogeneous quality and particularly close dimensional tolerances), easier management of production of even thinner gauges with further cost reduction and even lower impact on the environment.

The world's only technology for continuous casting and rolling

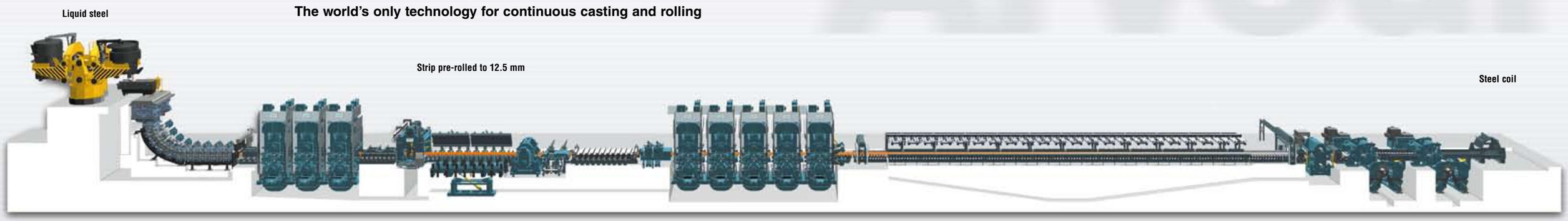

A Consteel electric furnace (tapping capacity 250 tonnes) supplies the ESP line with liquid steel with the most precise analysis and purity characteristics.

The liquid steel is cast into thin strands through the mould system (patented by Arvedi) to obtain the best quality characteristics with a high degree of reliability.

An innovation of epochal value: the direct connection of casting and rolling. The thin strand leaving the mould is reduced in thickness while the core is still liquid and directly rolled at a high temperature to obtain a high precision intermediate strip with a homogeneous structure.

The intermediate strip, is re-heated in the Induction Heater, the first example of its kind in the world, and subsequently reduced to the final thickness by the finishing mill which operates at constant speed and temperature to obtain the best product characteristics.

The continuously rolled strip, cooled with the most suitable means to give the steel the desired mechanical and structural characteristics, is cut and subsequently wound on the downcoiler.

The products cover the broadest range of steels and gauges down to hot rolled ultrathin gauges (0.8 mm) which for many applications can replace cold rolled strip.

Highly flexible and reliable production to compete in the quality steels segment

Acciaieria Arvedi's particular plant conception makes its special products, with a higher added value, the strong point of its sales mix as they can be produced flexibly and economically.
Italian and foreign customers also recognize in Arvedi steel the best quality characteristics as regards weldability, formability, strength and constancy.
These positive characteristics are consequently reflected in significant savings for all those industrial productions where steel is the raw material.

1

Arvedi steel meets end-users' primary requirements

- it is directly hot rolled in the broadest range of gauges - down to 0.8 mm - and widths - 1550 mm - even for thin gauge high strength steels;
- it guarantees higher strength values and consequently a saving in weight due to the use of lower gauges;
- thanks to close dimensional tolerances, similar to those of cold rolled products, it increases processing yield;
- it is welded and processed better because it is very clean, being obtained from a production and refining cycle that guarantees a very low inclusional level.

(Photo 1) In-line cast-rolling

(Photo 2) Overall view of the ESP process

The advantages of pickled and hot dip galvanised steel

The coil coming from the cast-rolling plants (ISP and ESP) is further treated on pickling and hot dip galvanizing plants to supply end users with a product having a surface ready to use and protected from corrosion.

The continuous pickling lines, equipped with skinpass plant, have a capacity of about 3 mtpy and are able to process even ultrathin hot rolled gauges, supplying a product which for many applications is equivalent to cold re-rolled material.

The galvanising lines, among the most recent in Europe, have a capacity of 1,000,000 tpy and a production range with gauges from 0.3 to 4.0 mm and finishing which includes tension levelling, skinpass and surface protection such as chemical passivation in accordance with standard 2002/95/EC (Rohs) and oiling.

The hot dip galvanised steel produced by Acciaieria Arvedi combines the excellent characteristic of protection from corrosion with the guarantee of the quality of the underlying steel.

Partners to our customers

Acciaieria Arvedi carries out pre-processing activities on steel strips, being equipped with a vast and modern range of cutting lines for flat rolled products. Its logistical position allows processing and distribution activity to end users over a vast market area, in particular for the car, white goods and construction industries.

The Arvedi pre-painted steel. *A safe and environmentally sustainable product*

Thanks to the installation of the pre-painting line, Acciaieria Arvedi is able to completely verticalize flat rolled steel production from the hot-rolled strip up to the pre-painted galvanized coil. This result is achieved in a single production site through compact, environmentally sustainable processes which guarantee the highest quality for the final product.

The advanced coil-coating technology together with the high quality of the coating system guarantee an excellent aesthetic result and durability over time. Aesthetics and durability are added to the intrinsic quality of the basic steel.

The choice of the most suitable coating can be either made by the Customer or proposed by the Arvedi technicians.
The best-known and industrialized coating systems are polyester coatings, HD (high-durability) polyester coatings and paints with PVDF (polyvinylidene fluoride) resins. Other customized painting systems are always available upon request.

Arvedi pre-painted steel is a safe product, free of CrVI, lead and other heavy metals , as prescribed by the EU REACH provisions for the protection of human health and the environment against the risks from chemical substances.

Furthermore, the steel substrate is obtained through our innovative Arvedi ISP/ESP® processes which fully exploit steel's recyclability and significantly reduce CO_2 and NO_x emissions compared to conventional steelmaking processes.

An aerial view of the Acciaieria Arvedi area dedicated to the coil pickling, galvanizing and pre-painting lines.

1

2

(photo 1) Pre-painting line

(photo 2) Pre-painted strip after the ovens

The summary of constantly developing industrial thinking

Acciaieria Arvedi, in parallel with the development of new products, has particularly reinforced its European sales network so as to improve the level of collaboration with customers and has set up a technical engineering service in order to help find new product solutions.
Arvedi steel presents itself to the market as an absolutely new product since it is obtained through a highly innovative process that is constantly under development and which gives the hot rolled strip unique characteristics and properties that are reflected in real advantages for end users.
A team of engineers specially trained for process and product development gives technical assistance to customers so as to realise new projects and are aided by European study and research centres of the highest level; among these can be cited the Politecnico di Milano and Centro Sviluppo Materiali in Rome (Italy), the Technical University of Aachen - RWTH, the University of Freiberg (Bergakademie), the BFI centre of materials analysis in Düsseldorf (Germany) and Advent (Canada).

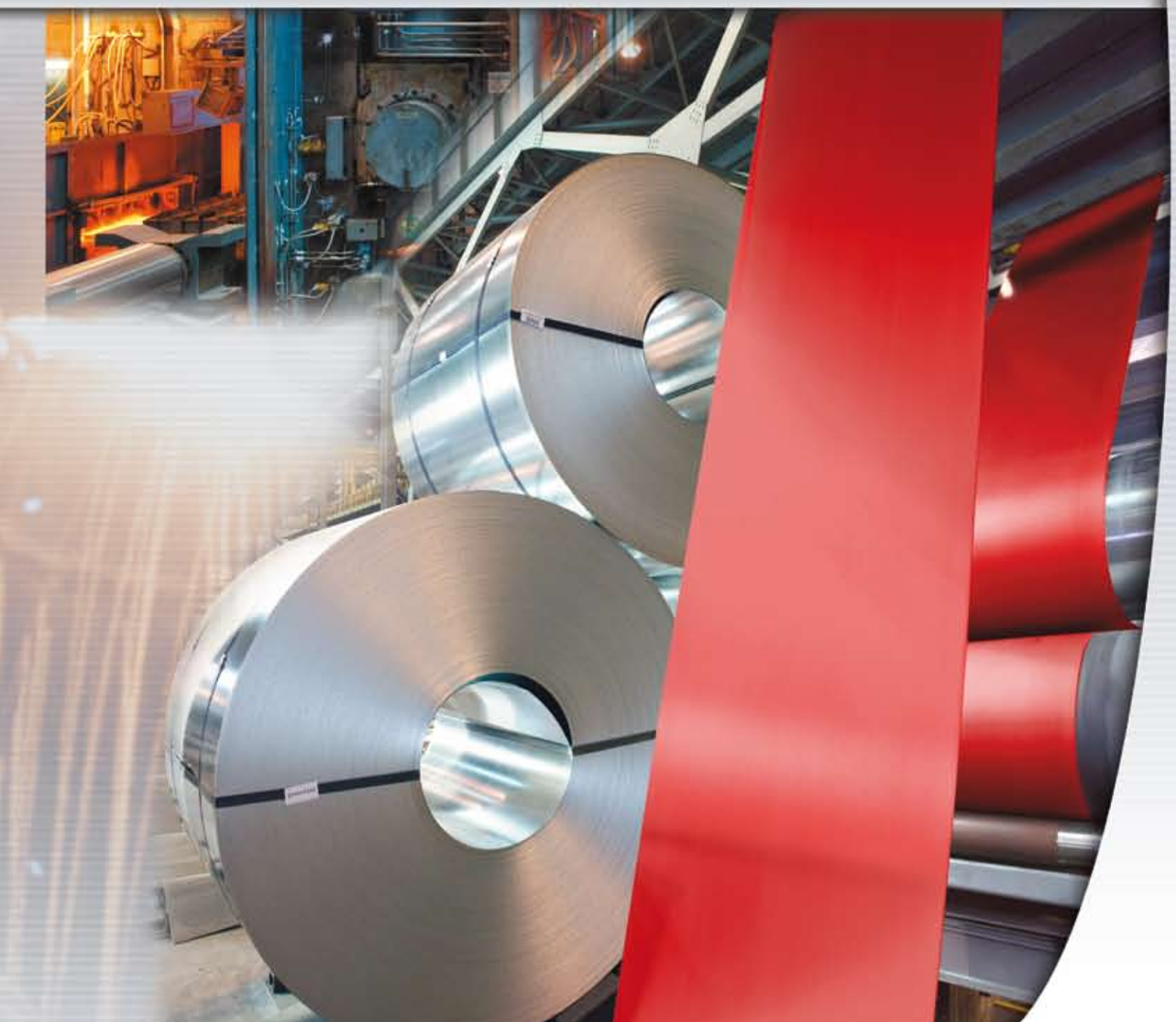

Charging the electric arc furnace

The furnace is charged mainly with ferrous scrap and with a smaller quantity of solid pig iron and/or sponge iron together with melting materials which consist mainly of lime.

Melting and Refining

The electric arc furnace carries out a melting function through the use of electrical power and the energy coming from combustion and chemical oxidation reactions. Refining of the liquid metal is carried out in the ladle furnace and consists mainly in refining the chemical analysis and centring the temperature.

Casting and rolling into coils

The liquid steel is cast into a thin slab, immediately reduced in thickness with a still-liquid core, fed directly into the pre-rolling plant (and for ISP cut into intermediate strips). The pre-rolled intermediate strip, the temperature of which is raised by about 150-200°C by an induction heater,is (for ISP collected in the Cremona Furnace and) from here fed into the finishing mill, reduced to the final thickness and subsequently cooled and wound into coils.

Pickling

The pickling process, carried out in a hydrochloric acid bath, removes the surface oxide generated during the hot rolling phase and is followed by surface finishing through skinpass and oiling.

Galvanising

Galvanising, following treatment in the heating furnace with its reducing atmosphere, occurs through immersion in a bath of molten zinc. The material is then finished through a skinpass and flattening machines and then passivated.

Pre-painting

The painting process develops through an initial surface preparation phase by chemical pre-treatment of the strip followed by the application of the paint using a rolling machine and finally drying in ovens.

Sales and pre-processing notes

Strips, plates and blanks can be obtained on our finishing lines which include slitters, flattening machines and blanking machines. The service provides the delivery of finished (or semi-processed) products in conformance with the production plans specifically requested by the customers.

Summary of the production range. Black and pickled coils

For the complete range (understood as black, pickled and galvanized coil) please refer to the production catalogue

Microalloyed Steels UNI EN 10149-2 FIAT 52812

Gauges:
From **mm 1.00**
To **mm 10.00**

EN Standard:
Fe E 275 TM (FEE 270)
S 315 MC
S 355 MC (FEE 340)
S 380 MC (FEE 380)
S 420 MC (FEE 420)
S 460 MC
S 500 MC
S 550 MC
S 600 MC
S 650 MC
S 700 MC

Steel Grade:
From **ARCOL 27**
To **ARCOL 70**

Dual Phase Ferritic and Martensitic Steels FIAT 52815

Gauges:
From **mm 1.50**
To **mm 5.00**

EN Standard:
(FEE 600 DP)
(FEE 800 DP)

Steel Grade:
ARCOL 600 DP
ARCOL 800 DP

Cold Forming Steels UNI EN 10111

Gauges:
From **mm 0.80**
To **mm 12.00**

EN Standard:
DD 11
DD 12
DD 12 M

Steel Grade:
AD 02
AD 03
AD 03 M

Steels for Gas bottles UNI EN 10120

Gauges:
From **mm 1.50**
To **mm 10.75**

EN Standard:
P 245 NB
P 265 NB
P 310 NB
P 355 NB

Steel Grade:
AR 37 APB
AR 42 APB
AR 46 APB
AR 51 APB

Steels for Pressure Vessels UNI EN 10028-2

Gauges:
From **mm 1.50**
To **mm 7.50**

EN Standard:
P 235 GH
P 265 GH

Steel Grade:
AR 37 AP
AR 42 AP

Weathering Steels UNI EN 10025-5

Gauges:
From **mm 1.50**
To **mm 8.00**

EN Standard:
S 235 J2W
S 355 JOWP

Steel Grade:
ARCOR 43
ARCOR 52
ARCOR 750

General Construction Steels UNI EN 10025-2

Gauges:
From **mm 0.80**
To **mm 12.00**

EN Standard:
37/ S 235
44/ S 275
52/ S 355

Steel Grade:
AR 37
AR 44
AR 52

Steels for Tube and Pipe (API 5L EN 10208) 5CT

Gauges:
From **mm 1.50**
To **mm 10.75**

EN-Standard:
L 245 MB
J 55

Steel Grade:
AR 42 B
AR 55 J

Ferritic and Bainitic Steels FIAT 52815

Gauges:
From **mm 1.50**
To **mm 5.00**

EN-Standard:
Fe 450 FB
Fe 590 FB

Steel Grade:
ARCOL 45 FB
ARCOL 60 FB

Boron Steels UNI EN 10083-3

Gauges:
From **mm 2.20**
To **mm 8.00**

EN-Standard:
20 Mn B5
30 Mn B5

Steel Grade:
ARBOR 20
ARBOR 30

Carbon Steels UNI EN 10083-1 UNI 8893

Gauges:
From **mm 1.50**
To **mm 10.00**

EN-Standard:
Da C 15
A C 70

Steel Grade:
From **AC 15**
To **AC 70**

Alloy Steels EN 10083

Gauges:
From **mm 3.00**
To **mm 8.00**

EN-Standard:
51 CRV 4

Steel Grade:
AC 50 CRV

Dimensional tolerances. Thickness tolerances

Black and pickled coils and strips (ref. EN 10051)

Normal thickness (mm)	Thickness tolerances			Transversal profile	
	To standard UNI EN 10051 (1)	Close on coil Arvedi (2)	Ristrette su nastro slitt. Arvedi	To standard EN 10051 40 mm from edges	Controlled 25 mm from edges
0.80 ÷ 1.20	± 0.17	± 0.06	± 0.04	0.13	0.04
1.21 ÷ 1.50	± 0.17	± 0.06	± 0.04	0.13	0.04
1.51 ÷ 2.00	± 0.17	± 0.08	± 0.06	0.13	0.05
2.01 ÷ 2.50	± 0.18	± 0.10	± 0.08	0.13	0.05
2.51 ÷ 3.00	± 0.20	± 0.10	± 0.08	0.13	0.06
3.01 ÷ 4.00	± 0.22	± 0.12	± 0.10	0.13	0.06
4.01 ÷ 5.00	± 0.24	± 0.12	± 0.10	0.13	0.07
5.01 ÷ 6.00	± 0.26	± 0.13	± 0.11	0.13	0.07
6.01 ÷ 8.00	± 0.29	± 0.15	± 0.12	0.13	0.08
8.01 ÷ 10.00	± 0.32	± 0.20	± 0.17	0.13	0.08
10.01 ÷ 11.00	± 0.35	± 0.24	± 0.21	0.13	0.10

Note:
(1) the values are not applied to the ends of the coils for length L(m) = 90/nominal thickness (mm).

(2) the values are applied to the whole coil length.

Even closer or asymmetrical thickness tolerances are possible but have to be agreed case by case in the order acquisition phase.

Summary of the production range. Hot dip galvanized coils

High yield point hot dip galvanised steels for cold forming UNI EN 10292

Gauges:
From **mm 0.50**
To **mm 4.00**

Standard-EN:
HX 260 LAD
HX 300 LAD
HX 340 LAD
HX 380 LAD
HX 420 LAD

Steel Grade:
ARZINC 260 H
ARZINC 300 H
ARZINC 340 H
ARZINC 380 H
ARZINC 420 H

High yield point hot dip galvanised steels for applications as per FIAT 52812

Gauges:
From **mm 0.5**
To **mm 4.00**

FIAT-Standard:
Fe E 270 ZNT/F
Fe E 340 ZNT/F
Fe E 420 ZNT/F

Steel Grade:
ARZINC 275 F
ARZINC 355 F
ARZINC 420 F

Hot dip galvanised steels for structural uses UNI EN 10326

Gauges:
From **mm 0.25**
To **mm 4.00**

EN-Standard:
S 220 GD + Z
S 250 GD + Z
S 280 GD + Z
S 320 GD + Z
S 350 GD + Z

Steel Grade:
ARZINC 220 s
ARZINC 250 s
ARZINC 280 s
ARZINC 320 s
ARZINC 350 s

Hot dip galvanised steels for cold forminig UNI EN 10327

Gauges:
From **mm 0.25**
To **mm 4.00**

EN-Standard:
DX 51 D+Z
DX 52 D+Z

Steel Grade:
ARZINC 51
ARZINC 52

Hot dip galvanised Dual Phase Ferritic and Martensitic steels

Gauges:
From **mm 0.8**
To **mm 4.00**

EN-Standard:
Fe 600 DP
Fe 800 DP

Steel Grade:
ARZINC 600 DP
ARZINC 800 DP

Hot dip galvanised Ferritic and Bainitic steels FIAT 52815

Gauges:
From **mm 1.50**
To **mm 4.00**

EN-Standard:
Fe 450 FB
Fe 590 FB

Steel Grade:
ARZINC 450 FB
ARZINC 600 FB

The strong points of Arvedi steels and their main characteristics

QUALITY
The innovative rolling process allows the manufacture of steels with outstanding characteristics.

PROCESSABILITY
The solidification process after liquid core reduction allows fine grain homogeneous structures with high cold formability characteristics to be obtained.

HIGH STRENGTH
Our research department has developed a vast range of high strength steels able to satisfy the requirements of the most demanding designers.

ASSISTANCE
Our technicians are available to study and search for better solutions aimed at the manufacture of end products.

SURFACE
Clean and defect-free: suitable for the most demanding uses.

CLOSE TOLERANCES
High precision levels of gauge, flatness and crown.
The same tolerances as cold rolled products.

RELIABILITY
Repetitive and homogeneous mechanical characteristics for all supplies.

The immediate benefits for the processing industry

SPEED
90 minutes from the raw material to the finished product.
Delivery times: minimum 7 days, maximum 60 days.

FLEXIBILITY
Broad production mix: steel grades and thin gauges (also in substitution of cold rolled strip) available in the various supply states.

SERVICE
Minimum lot: 1 coil
Quality pre-sales and after-sales technical assistance.

Galvanised coils and strips (ref. EN 10143)

Normal thickness (mm)	Normal tolerances		Close tolerances	
	L ≤ 1200 mm	L 1201 ÷ 1500 mm	L ≤ 1200 mm	L 1201 ÷ 1500 mm
0.40 ÷ 0.60	± 0.06	± 0.07	± 0.04	± 0.05
0.61 ÷ 0.80	± 0.07	± 0.08	± 0.05	± 0.06
0.81 ÷ 1.00	± 0.08	± 0.09	± 0.06	± 0.07
1.01 ÷ 1.20	± 0.09	± 0.10	± 0.07	± 0.08
1.21 ÷ 1.60	± 0.11	± 0.12	± 0.08	± 0.09
1.61 ÷ 2.00	± 0.13	± 0.14	± 0.09	± 0.10
2.01 ÷ 2.50	± 0.15	± 0.16	± 0.11	± 0.12
2.51 ÷ 3.00	± 0.17	± 0.18	± 0.12	± 0.13
3.01 ÷ 4.00	± 0.19	± 0.20	± 0.14	± 0.15

Gauge control

The coils produced at Acciaieria Arvedi present particularly close and uniform gauge tolerances.

This very important result is made possible by the integrated management of the pre-rolling and rolling phases which are governed by specific plant and software programmes, wholly developed by our technical staff.

The particular conception of the process, with pre-rolling of the thin slab immediately after solidification in the continuous caster, allows precise gauge and profile control to be carried out on the slab during roughing and a semi-finished product to be prepared for finishing rolling with very precise and reliable geometrical characteristics.

Subsequent finishing rolling is therefore done on a bar starting with optimal and constant gauge conditions, at constant temperature and speed and at stable and well-controlled process conditions such as to ensure the results shown in the table "Dimensional tolerances".

Arvedi ultrathin steels

Research and development programmes conducted in collaboration with:

In the thin and ultrathin gauge range (less than 1.5 mm) the offer of Arvedi steels effectively covers a large part of those applications traditionally oriented towards the use of cold rolled strip.

Thanks to ISP/ESP technology, where reduction of slab thickness is achieved with a "liquid core", industrial production can be achieved of gauges that are unique in the world in terms of low carbon content steels for cold forming, structural steels and above all micro-alloy, high elastic limit steels. The geometrical characteristics of the ultrathin strips amply conform to the parameters set by European reference standards for cold rolled products (fig. 1).
The excellent degree of cold formability, as shown by the limit curve (fig. 2) is substantially identical to that of a cold rolled product of the same steel grade and gauge (tests conducted by leading independent laboratories).

Mechanical characteristics remain practically constant along the whole strip and throughout the cross-section. Homogeneousness of the mechanical characteristics, as shown by the tests conducted (fig. 3), is guaranteed by the fine-grain metallographic structure (in accordance with ASTM standards values are between 10 and 12) and by the high level of production process automation from the melt shop to casting and rolling. The reliability of the process also guarantees the repetition of the mechanical characteristics in the various production campaigns.

fig.1

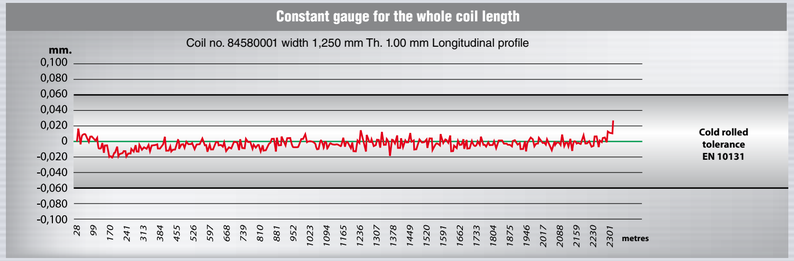

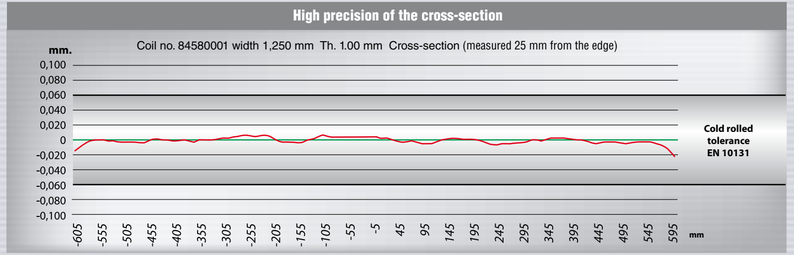

fig.2

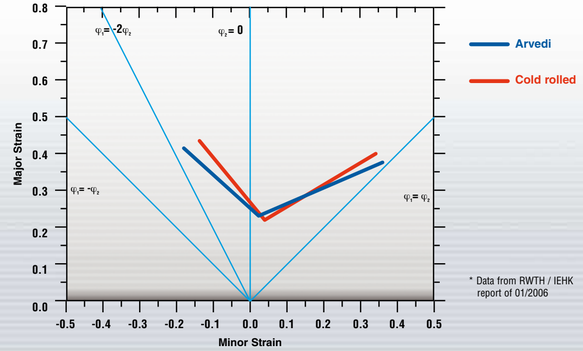

fig.3

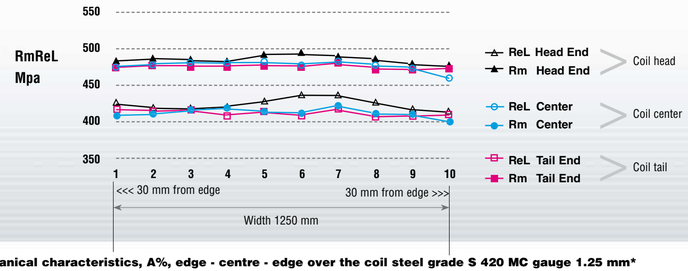

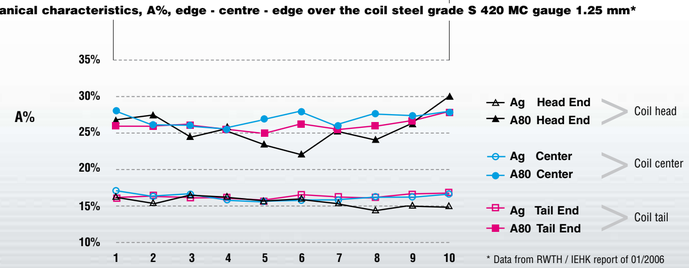

Arvedi steels for the car industry

Acciaieria Arvedi has gained a leading role both in Italy and Europe in the high strength steels sector - HSLA (High Strength Low Alloy) - and in the new-generation steels - AHSS (Advanced High Strength Steel) - such as Dual Phase.
Since 2006 the high strength steel range as a whole has constituted the general core of products sold. High strength steels are aimed mainly at the car industry which is increasingly committed to building safer, lighter and more ecological cars. This position of excellence has been achieved thanks to a precise strategy which, starting from investments in the integrated cast-rolling lines based on avant-garde technology - ISP/ESP - have led to the decision to pursue the aim of quality specifically addressed to the high strength steels segment; with their combination of excellent characteristics for processing and welding and with lower costs due to a lower ferroalloy content, there is enormous scope for their application in the building of self-propelled vehicles and in particular cars.

Main applications of the various steel grades produced for the car industry

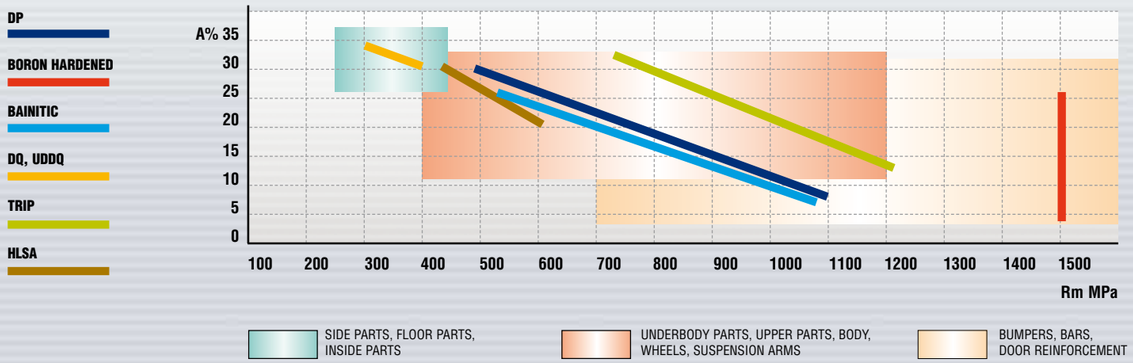

Some possible applications - frame structural elements

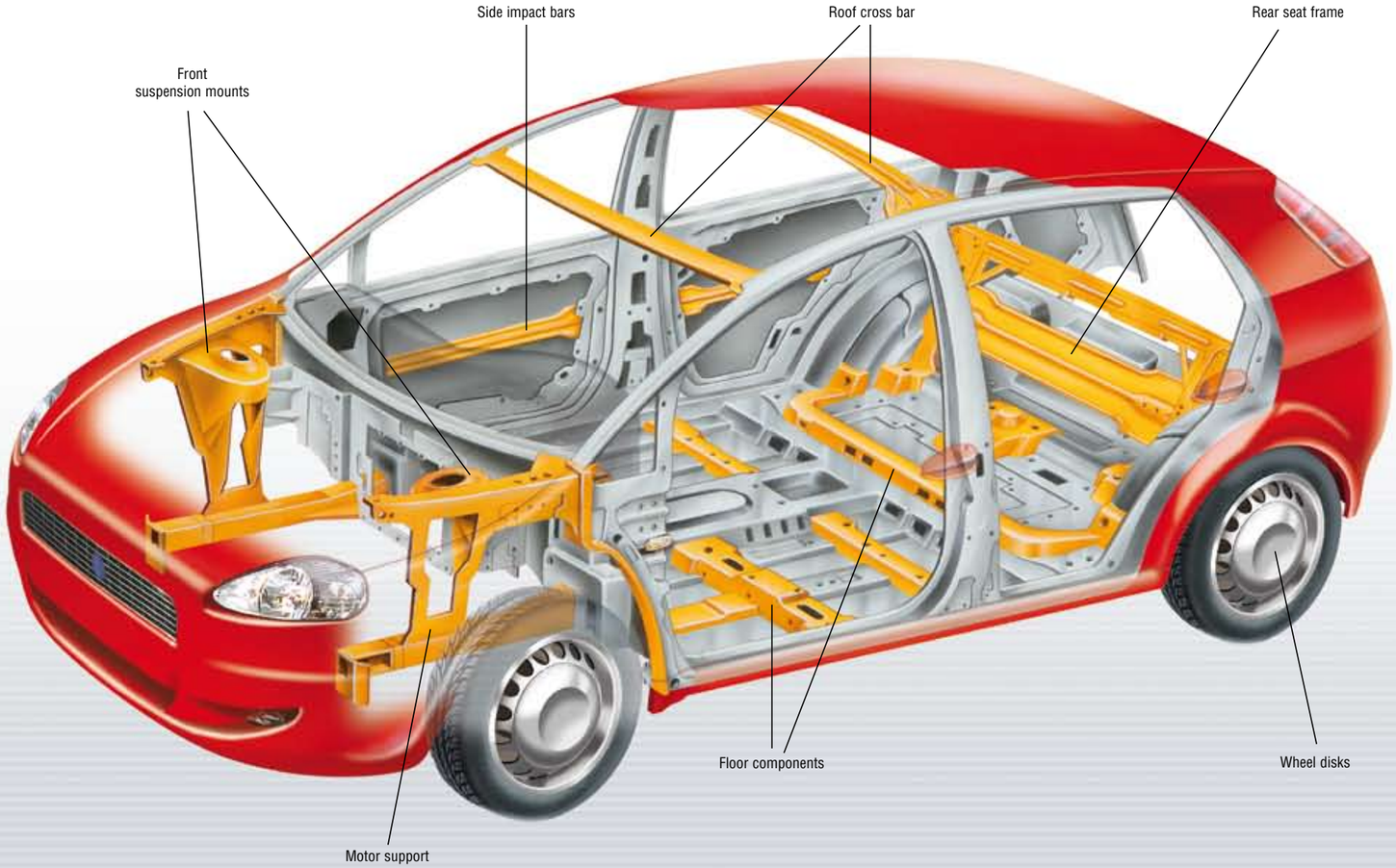

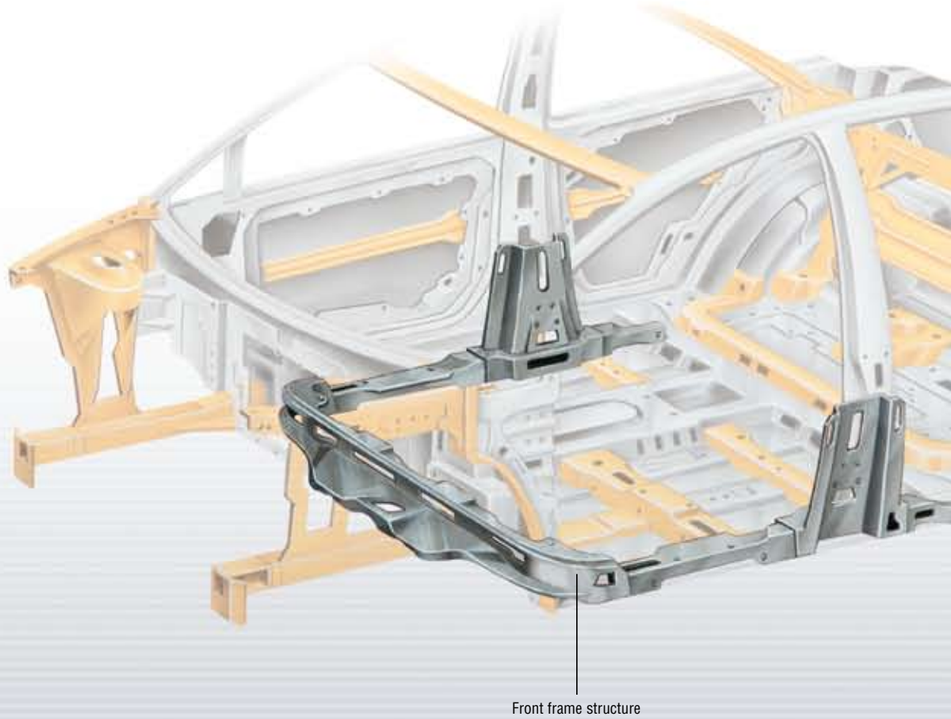

Arvedi steels for the car industry

Table of pickled steels

Type	Steel grades	gauge (mm)												
		1	1.25	1.5	1.8	2	3	4	5	6	7	8	9	10
HSLA	FE E 270													
HSLA	S 315 MC / FE E 300													
HSLA	S 355 MC / FE E 340													
HSLA	FE E 380													
HSLA	S 420 MC / FE E 420													
HSLA	S 460 MC													
HSLA	S 500 MC / FE E 500													
HSLA	S 550 MC													
HSLA	S 600 MC													
HSLA	S 650 MC													
HSLA	S 700 MC													
MULTI PHASE	DP 600													
MULTI PHASE	DP 800													
MULTI PHASE	HR 45													
MULTI PHASE	HR 60													
MULTI PHASE	FB 450													
MULTI PHASE	FB 590													

Table of galvanized automotive steels

Steel grades	gauge (mm)								
	0.5	0.8	1	1.25	1.5	1.8	2	3	4
H 260 LAD / FE E 270									
H 300 LAD / FE E 300									
H 340 LAD / FE E 340									
H 380 LAD / FE E 380									
H 420 LAD / FE E 420									
DP 600									
DP 800									
FB 450									
FB 590									

Some possible applications

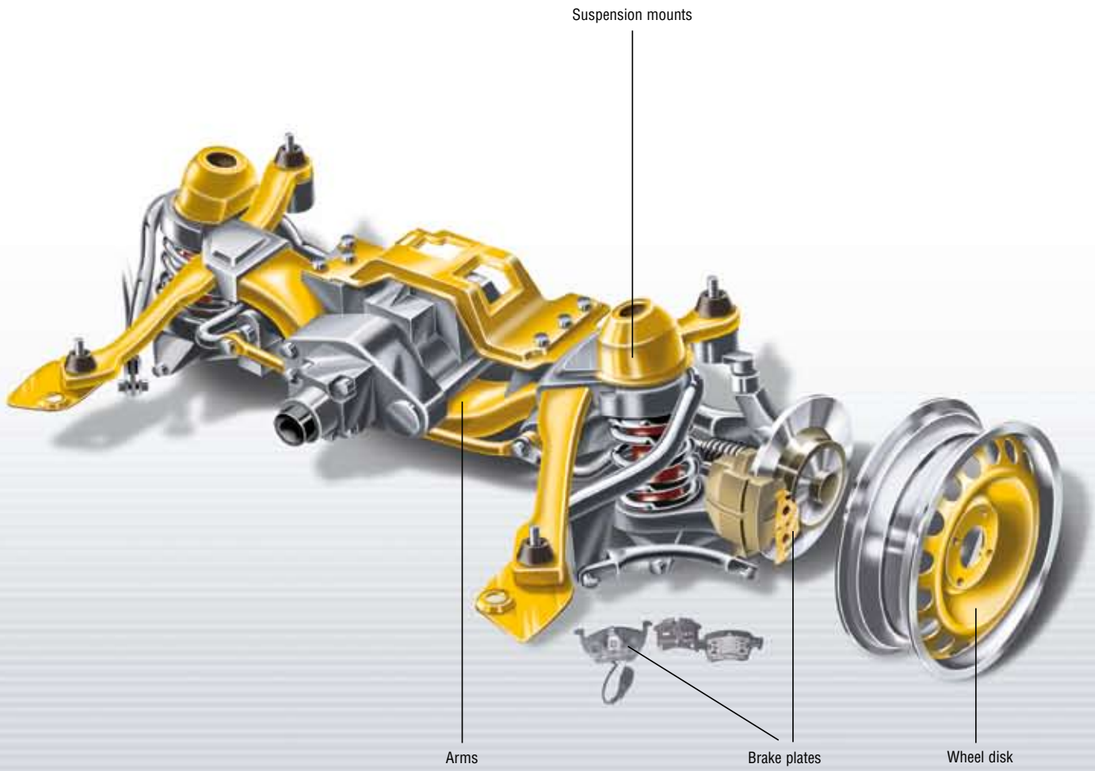

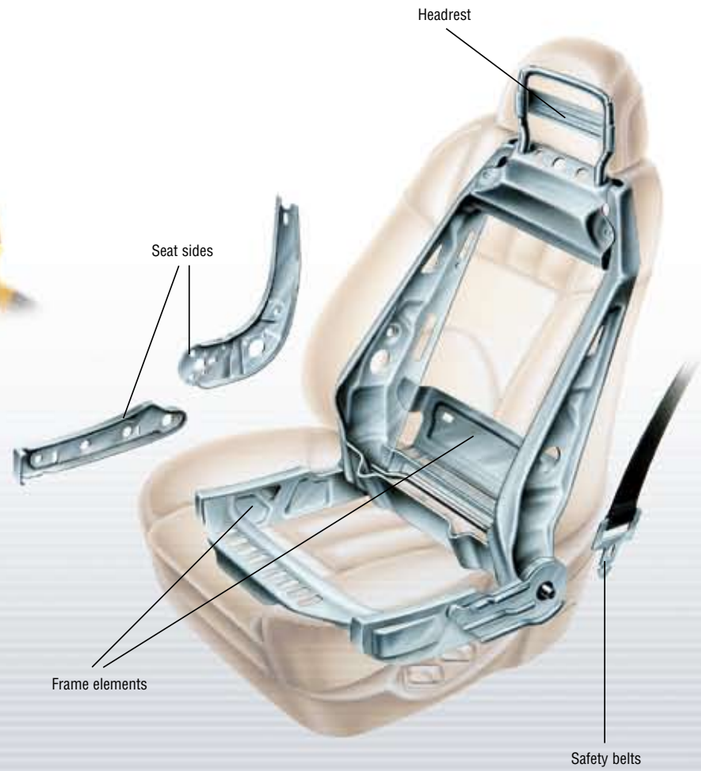

Arvedi steels for the construction industry





Table of structural steels

Steel grades	gauge (mm)														
	1,0	1,2	1,5	1,8	2	3	4	5	6	7	8	9	10	11	12
S 235 JR J2 CE															
S 275 JR J2 CE															
S 355 JR J2 CE															
S 235 J2 W															
S 355 J0 WP															

The range of steels for structural applications is composed of both traditional construction steels, produced in conformance with EC Directive 89/106/CEE (Directive for Construction Products) guaranteed by the relative CE trade mark and by improved weather resistance steels.

Acciaieria Arvedi offers many advantages for customers that use hot-dip galvanised structural steels:

- a vast range of coatings (differentiated if needed on the two sides and with up to 450 g of zinc per square metre);
- "tailor-made" strip gauge in conformance with project prescription gauge tolerances, to a maximum of 4 mm;
- quality assurance of the steel below the zinc coating thanks to in-house management of all production phases, from the liquid steel to rolling.

Table of galvanized structural steels

Steel grades	gauge (mm)							
	0.25	0.40	0.75	1	1.5	2	3	4
DX 51								
DX 52								
S 220 GD + Z								
S 250 GD + Z								
S 280 GD + Z								
S 320 GD + Z								
S 350 GD + Z								





Pre-painted steels

Acciaieria Arvedi offers the market a pre-painted product characterized by the highest quality and safety standards.
Before delivery, the product is subjected to numerous controls aimed at verifying its mechanical characteristics, correspondence of the colour with the reference sample, hardness and brightness of the paint as well as a series of application tests to check both general characteristics and suitability for the particular applications requested by the customer.

The quality of the steel substrate is guaranteed by the in-house management of all the intermediate production phases, from hot rolling to coating.
Personalized colour and painting cycle make the product particularly versatile and allow numerous applications, from the building industry to industry generally.

Production capacity: 150.000 annual tons

Size range:
- Minimum thickness: 0.3 mm
- Maximum thickness: 1.2 mm
- Maximum width: 1500 mm

Colours: can be in all RAL colours and customized colours upon request.

Appearance: smooth or wrinkled.

Main coating systems: polyester, HD (High durability) polyester and PVDF (polyvinylidene fluoride).
Other coating systems are available upon request.

Polyester: this painting system offers flexibility and good outdoor wear with an excellent cost/performance ratio. Main outdoor applications are corrugated sheets, insulating panels, building materials and other building sector accessories.

HD Polyester: it has a very high resistance to exposure to sunlight. It is classified as a long-life product thanks to its excellent chalking resistance and very low colour variation over time. Typical applications are for residential buildings with high exposure to sunlight.

PVDF: this product is suitable for installations in areas with high levels of pollution and sunlight.

Arvedi steels for industry

The excellent quality of Arvedi steels can fully meet the demands of end users from numerous areas of industry.
Thanks to collaboration between our experts and customers' technicians products can be personalised on the basis of specific application requirements.
For example, it is possible to roll strip to the most suitable gauges within prescribed tolerances so as to optimise production yield in terms of quantity; or modulate mechanical characteristics in conformance with reference specifications so as to maximise the efficiency of pressing and moulding processes.
Once a product has been developed, subsequent production campaigns are carried out in every way identical to the previous one: in this way products always present the same requirements and therefore allow considerable savings in terms of machine preparation and setting times.
The particular conception of the ISP and ESP lines also allows particularly short delivery times and offers the possibility of reacting quickly to any non-standard production.

Steels grades for the main areas of application in industry

	S 320/350 MC	S 420/500 MC	S 600/700 MC	S 320/350 GD+Z	DD 12	DX 51/52 D+Z	P 245/355 NB	API 5L-5CT
Industrial and civil shelving								
Components for white goods								
Components for furniture								
Pressure vessels								
Earthmoving machinery								
Industrial vehicles								
Structural profiles								
Oil piping								

Quality - Environment - Safety: always our guiding concepts

Acciaieria Arvedi's environmental and safety policies are based on the recognition of the importance of protecting the environment and health and safety at work.
The environment, health and safety at work and the relative results of these - as shown from the environmental management system certification in accordance with ISO 14001:2004 and OHSAS 18001:2009 - are considered an essential part of the company's management system

System certifications:

Type of certification	Date first issued	by
Quality management system ISO 9001: 2000	22 / 06 / 2000	IGQ IQNET
Environmental management system ISO 14001: 2004	22 / 12 / 2004	IGQ IQNET
Safety management system BS OHSAS 18001:2007	31 / 12 / 2009	IGQ IQNET
TÜV - PED (Pressure Equipment Directive) 97/23/EC for pressure vessels		TÜV

Licences, approvals and product certifications:

Type of certification	Field of application	by
AD Merkbaltt W 0/TRD 100	Pressure vessels and boilers	TÜV
EC marking in conformance with Directive Steel for structural 89/106/CEE of the EC Council of 21/12/88	Steel for structural applications as per EN 10025-2	IGQ
Authorisation decree DM 9/1/96 by the Public Works Ministry for construction steels	Metallic constructions	


The environment:
a certified passion
ISO 14001 certification given to
Acciaieria Arvedi, Arvedi Tubi Acciaio and
Ilta Inox guarantees the respect of those
principles and procedures where the protection
of the environment is an essential value.
This result has been achieved by
means of investments in plants,
training and the awareness
that man makes
the quality of the
environment.
AcciaieriaArvedi
Arvedi Tubi Acciaio
iltainox
IGQ
DNV
ISO 14001
Istituto Italiano di Garanzia della Qualità and the company Det Norske Veritas Italy have certified the environmental management systems of Acciaieria Arvedi, Arvedi Tubi Acciaio and Ilta Inox designed according to ISO 14001.
Arvedi

AcciaieriaArvedi

AcciaieriaArvedi SpA

Via Acquaviva, 18
26100 Cremona / Italy
Tel.+ 39 0372 478.1
Fax + 39 0372 478.283

e-mail: sales@ast.arvedi.it
www.arvedi.it

Art Concept and graphic project:
Testa Consulenti & Creativi Pubblicitari

NOTE:
This catalogue is published solely for advertising purposes. Acciaieria Arvedi reserves the right to amend its content without notice. The sales department is at your disposal to supply any information on the product.

Printed on 08.20.2014

Illustration: N. Signorini (Graphic Art) Photo: Art Photo Digital execution and printed: Service Lito (Persico Dosimo - CR)